© DEN HARTOG INDUSTRIES, INC.

Copyright. All information furnished within this document, electronic file or design correspondence is the property of Den Hartog industries, Inc. and shall not be used, disclosed to others or copied without the expressed written consent of Den Hartog Industries, Inc.

SP0130-UT

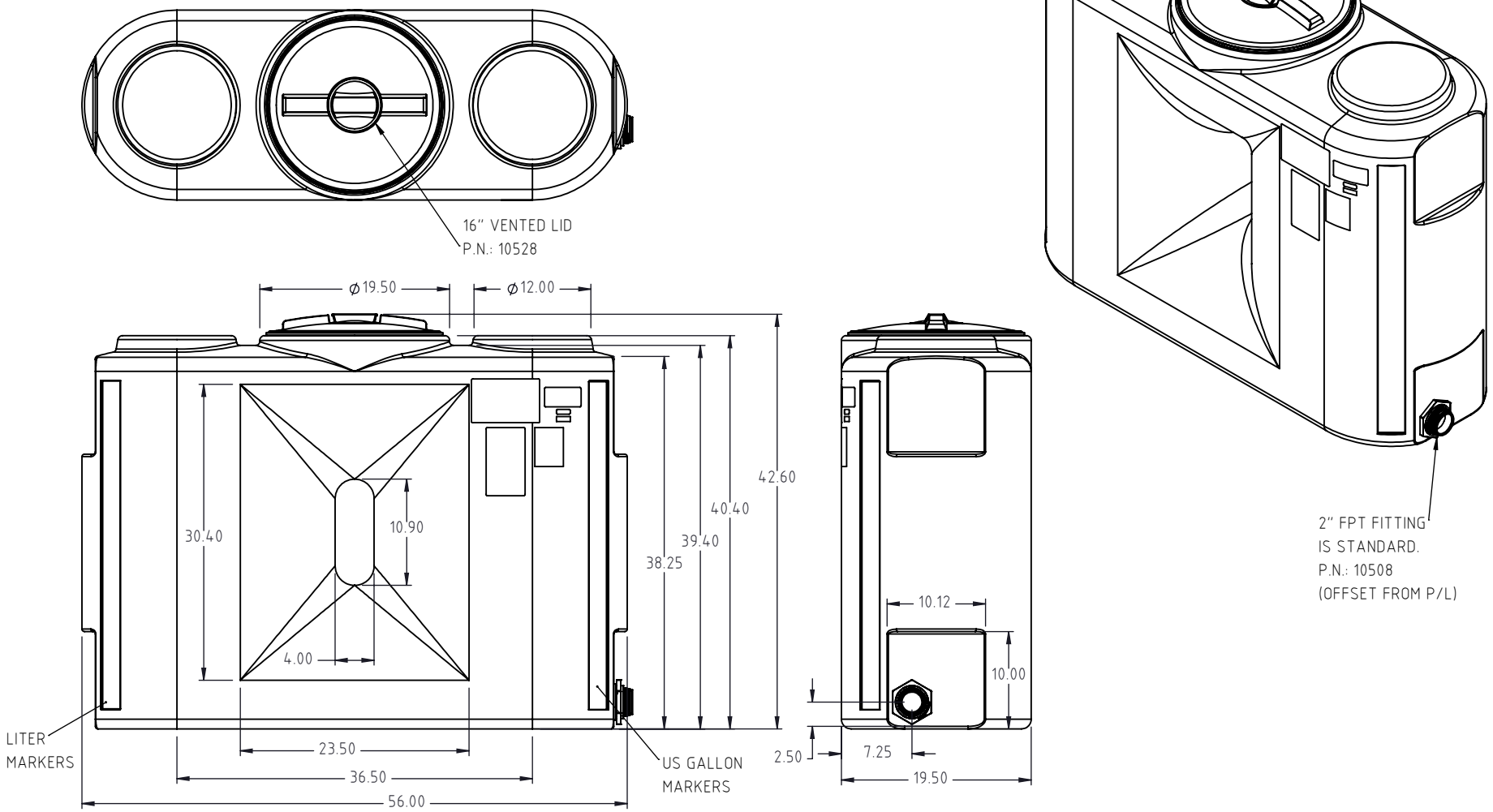

REV.	DESCRIPTION	BY	DATE	CCN

ALL DIMENSIONS ARE IN DECIMAL INCHES
TOLERANCES UNLESS OTHERWISE SPECIFIED

POLYETHYLENE
±1% @ 68° F

METAL
DECIMAL ± .125"
FRACTION ± 1/4"
ANGLE ± 1°

THIRD ANGLE PROJECTION
ANSI 14.5M

DRAWN / DATE: SAS 10/10/2023

APPRD. / DATE: BES 11/16/2023

SHOT WEIGHT: 75 LBS.

SHIPPING WEIGHT: 79 LBS.

FINISH:

MATERIAL: 10420

NOTES:
1.) NOM. WALL 0.300".

Den Hartog
INDUSTRIES, INC.
Ace Roto-Mold • Injection Molding • Blow Molding • Sowjoy
4010 HOSPERS DRIVE S. BOX 425, HOSPERS, IOWA 51238-0425

DESCRIPTION: SP, UTILITY 130 GAL

SCALE: N.S.

PART NO.: SP0130-UT

SHEET: 1 OF 1